EUROHARD

EHCNUBM2C450
EHCNUBM2C500

	A	B	C	D	E	F	G	H	I	J	K	L	M		N		
	1 Pc	1 Pc	2 Pcs	2 Pcs	1 Pc	1 Set	1 Pc	1 Set	1 Set	1 Pcs	1 Pcs	3 Pcs	4 Pcs		16 Pcs		
	O	P	Q	R	S	T	U	V									
	2 Pcs	2 Pcs	1 Set	1 Set	2 Pcs	4 Pcs	4 Pcs	2 Pcs									

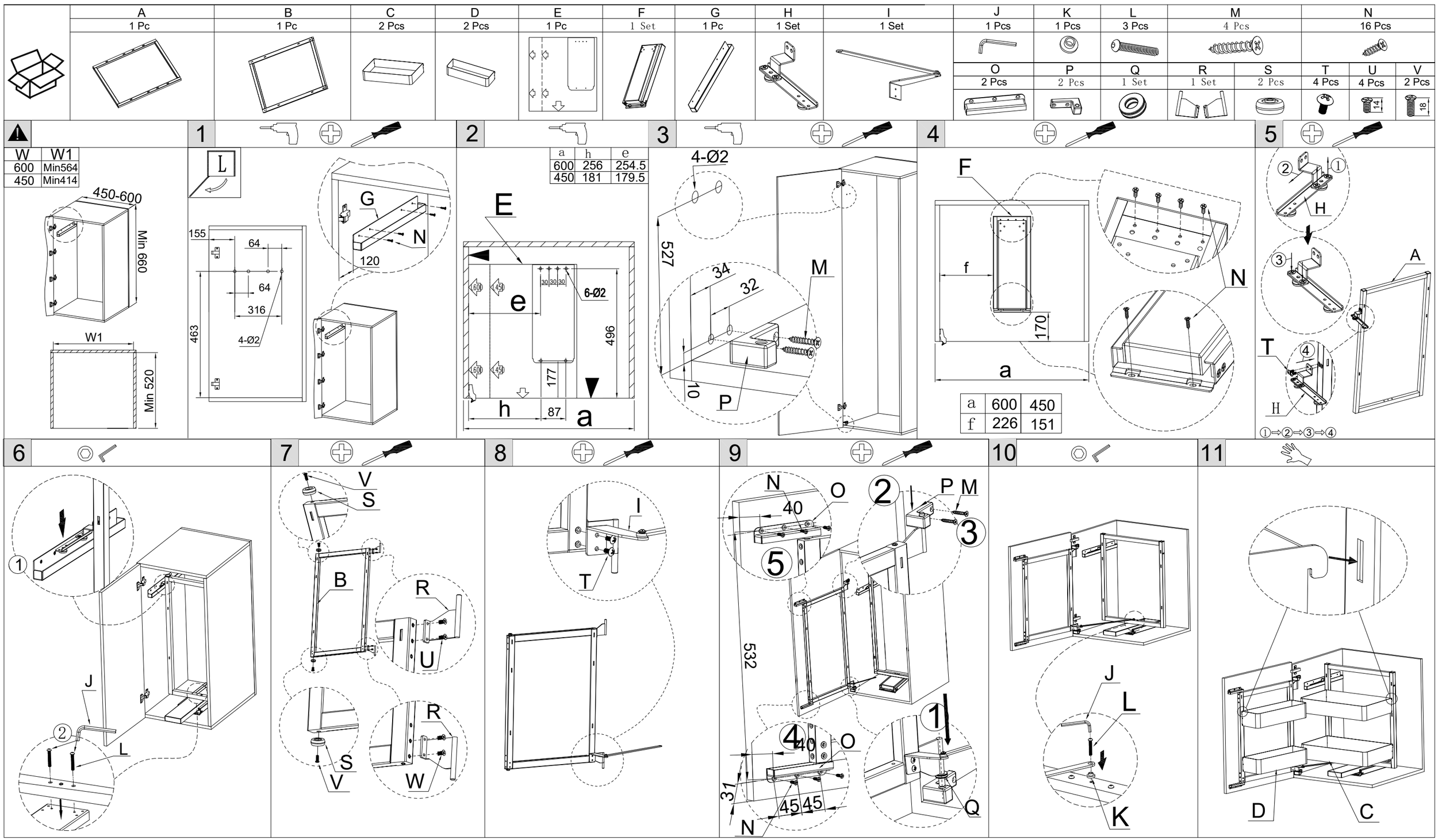

EUROHARD

EHCNUBM2C450
EHCNUBM2C500

A	B	C	D	E	F	G	H	I	J	K	L	M	N
1 Pc	1 Pc	2 Pcs	2 Pcs	1 Pc	1 Set	1 Pc	1 Set	1 Set	1 Pcs	1 Pcs	4 Pcs	4 Pcs	22 Pcs

O	P	Q	R	S	T	U	V
2 Pcs	2 Pcs	1 Set	1 Set	2 Pcs	10 Pcs	4 Pcs	2 Pcs

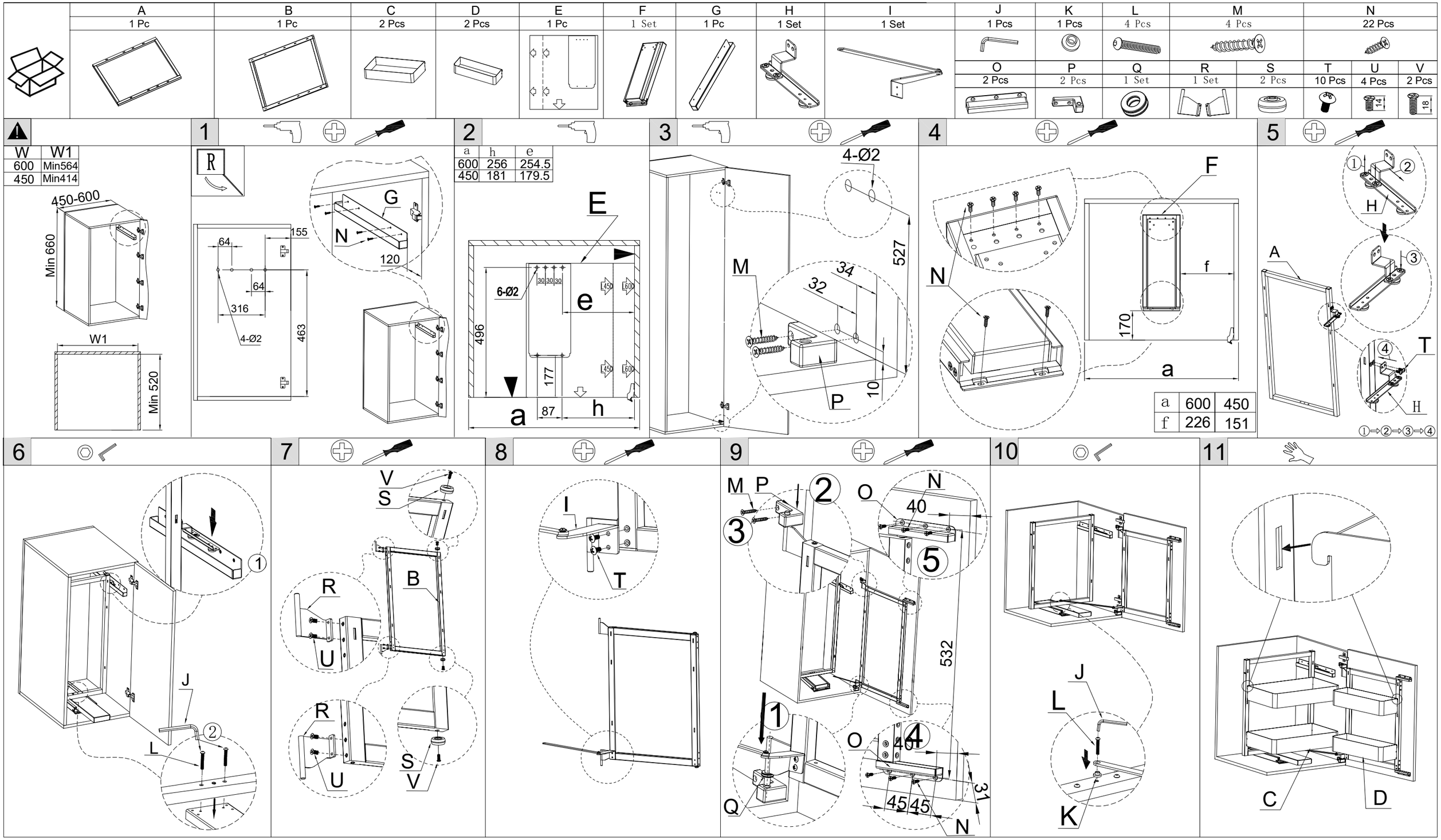

EUROHARD

EHCNUBM3C450
EHCNUBM3C500

	A	B	C	D	E	F	G	H	I	J	K	L	M		N		
	1 Pc	1 Pc	3 Pcs	3 Pcs	1 Pc	1 Set	1 Pc	1 Set	1 Set	1 Pcs	1 Pcs	3 Pcs	4 Pcs		16 Pcs		
	O	P	Q	R	S	T	U	V									
	2 Pcs	2 Pcs	1 Set	1 Set	2 Pcs	4 Pcs	4 Pcs	2 Pcs									

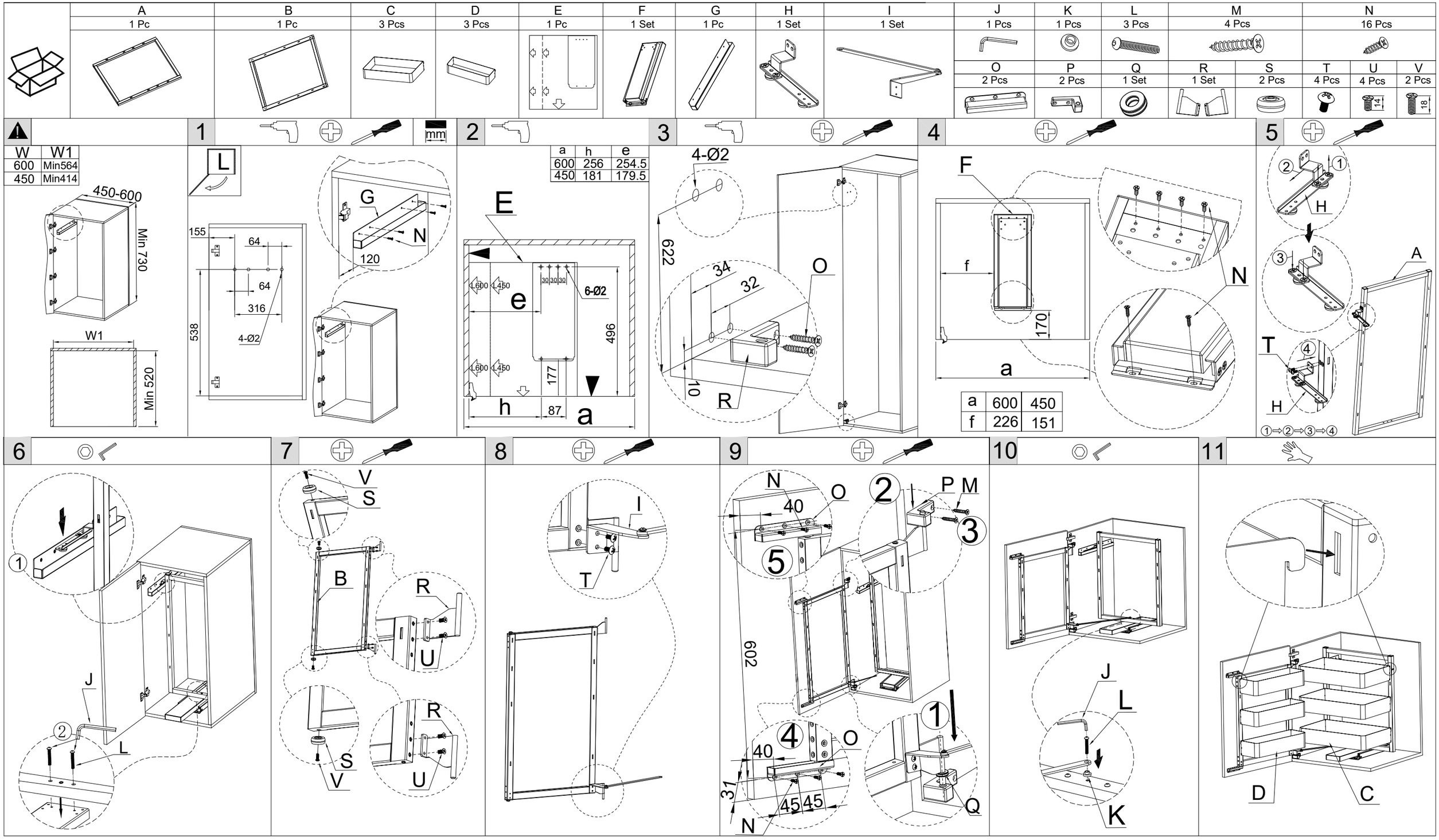

EUROHARD

EHCNUBM3C450
EHCNUBM3C500

	A	B	C	D	E	F	G	H	I	J	K	L	M	N
	1 Pc	1 Pc	3 Pcs	3 Pcs	1 Pc	1 Set	1 Pc	1 Set	1 Set	1 Pcs	1 Pcs	3 Pcs	4 Pcs	16 Pcs
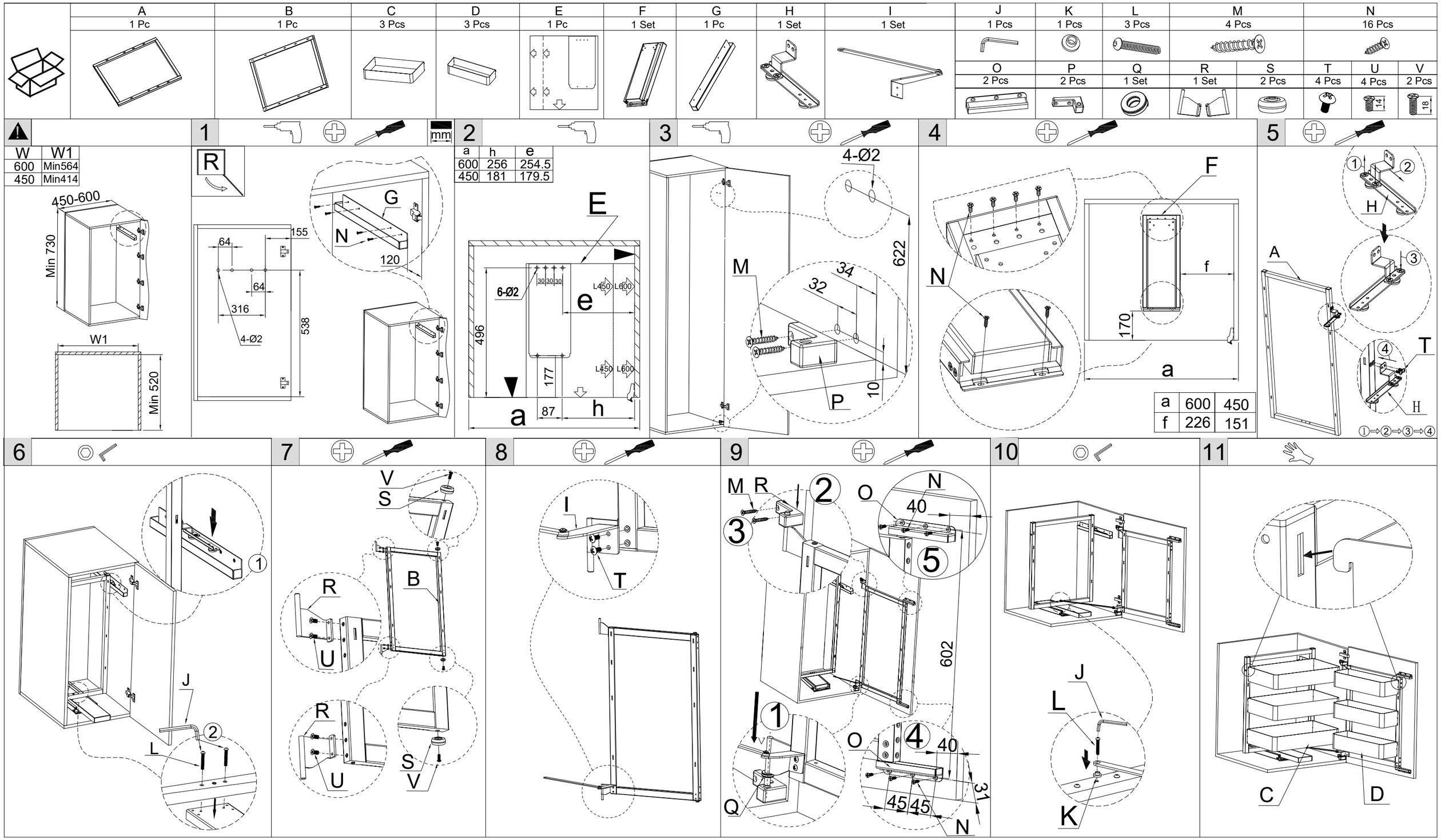
O	P	Q	R	S	T	U	V
2 Pcs	2 Pcs	1 Set	1 Set	2 Pcs	4 Pcs	4 Pcs	2 Pcs